ORDER NO. APD-7703-501

Service Manual

CAR STEREO
CX-5000EN

CAR STEREO CASSETTE TAPE PLAYER with AUTOMATIC EJECT

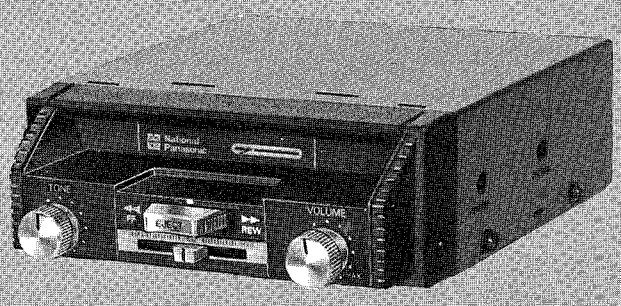

SPECIFICATIONS*

Type:	4-track, 2-program stereo system
Tape Speed:	4.75 cps
Frequency Response:	50 ~ 10, 000 Hz
Power Output:	
Continuous:	2 x 4.0 W (at 10% THD)
Maximum:	2 x 5.0 W (Volume and Tone Controls at max.)
(Conditions; at 400 Hz, 4 Ω load, 13.2 V DC)	
Powr Supply Voltage:	DC 12 V (11 V ~ 16 V), Negative ground
Power Consumption:	Approx. 8 W (0.6 A at 0.5 W output, DC 13.2 V)
Speaker Impedance:	4 ~ 8 Ω
Wow & Flutter:	0.3%
Crosstalk:	35 dB
Signal to Noise Ratio:	40 dB
Stereo Separation:	25 dB (at 400 Hz)
IC's:	3
Diode:	1
Dimensions:	Width: 140 mm Height: 50 mm Depth: 173 mm
Weight:	1.25 kg

FEATURES

- 4-track, 2-program automatic eject cassette car stereo tape player.
- DC 12 V, Negative ground.
- Stereophonic reproduction.
- Fast Forward/Fast Rewinding.
- Automatic eject at tape end.
- Underdash installation.

* Chromium-dioxide tape and C-120 tape are not recommended to use.
* Weight and Dimensions shown are approximate.
* Specifications subject to change without notice.

National

Matsushita Electric Trading Co., Ltd.

CONTENTS

	Page
DIMENSIONS AND LOCATION OF CONTROLS	1
FUSE REPLACEMENT	1
NORMAL CARE AND MAINTENANCE	1
PARTS LOCATION	2
IC EQUIVALENT CIRCUIT	3
INSTALLATION INSTRUCTIONS	3
SCHEMATIC DIAGRAM	4
WIRING DIAGRAM	5
AUTOMATIC EJECT SYSTEM	6
EXPLODED VIEW (UNIT)	8
EXPLODED VIEW (TAPE PLAYER)	9
REPLACEMENT PARTS LIST	7, 10 ~ 12
TROUBLE SHOOTING GUIDE	13

DIMENSIONS AND LOCATION OF CONTROLS

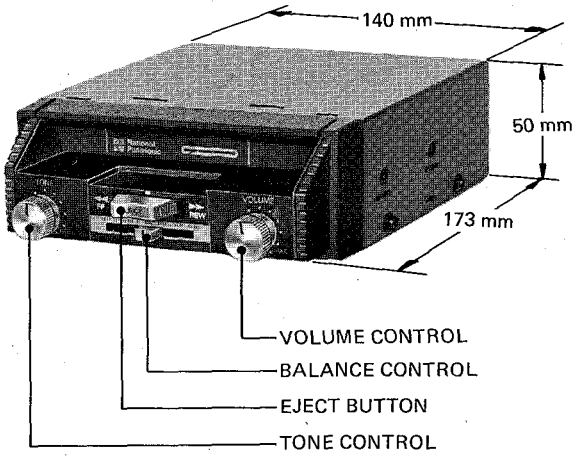

FUSE REPLACEMENT

Be sure to use a 3 A fuse for replacement. Use of a larger fuse may not protect the cercuit in the unit of excessive current drain.

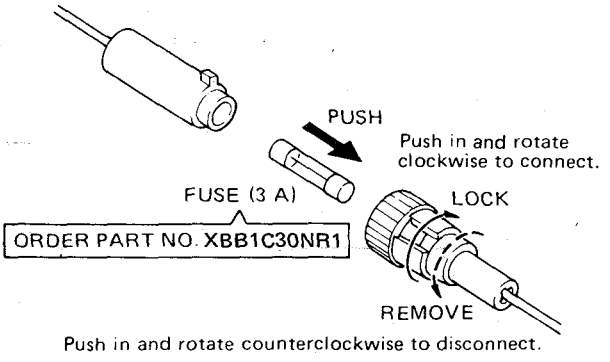

NORMAL CARE AND MAINTENANCE

- **Tape Player Maintenance**
  After many hours of operation, it is advisable to clea the oxide residue from the tape head and pinch roll ass'y to obtain superior performance from the playe Oxide accumulated on the tape head and pinch roll ass'y may cause tape hiss and malfunction.
  The more often the player is operated, the more ofte is should be cleaned.
- **Cleaning Tape Head**
  To clean the tape head, open the upper cover ar clean the residue from the head with a cotton swa dampened with isopropyl (rubbing) alcohol.

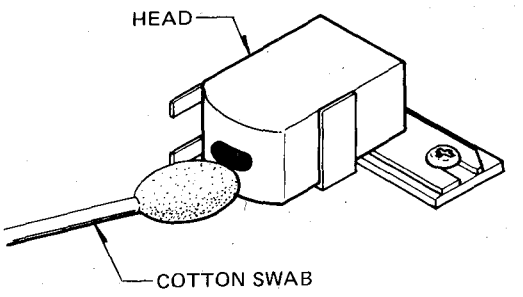

- **Cleaning Pinch Roller**
  To clean the pinch roller, turn the motor until operates by lifting up the DC motor.
  Clean the pinch roller with a cotton swab dampene with alcohol.

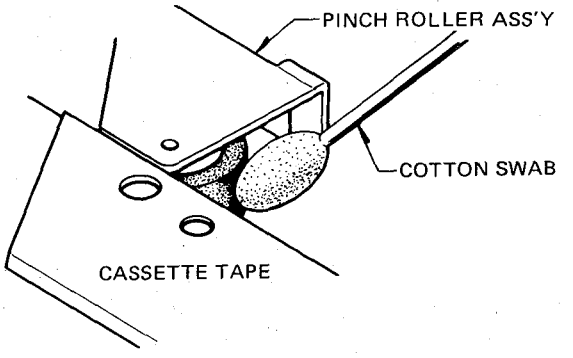

- **Head Azimuth Adjustment**
  Head azimuth adjustment can be made by removing th upper cover.
  Playback a standard test tape or recorded music tap and turn the head adjustment screw for maximun loudness.

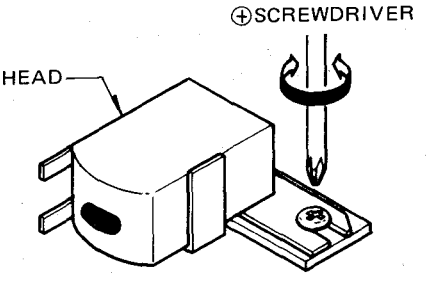

PARTS LOCATION

- Numbers in ( ) are indicated in the REPLACEMENT PARTS LIST.
- Refer to EXPLODED VIEWS in pages 8, 9

TOP VIEW, WITH COVER REMOVED

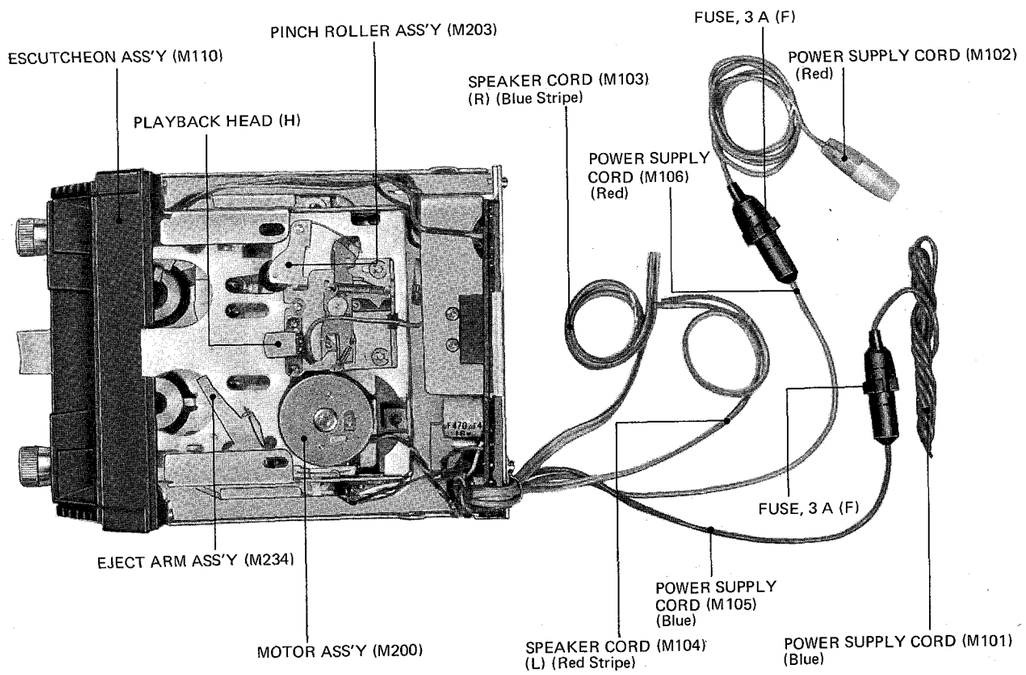

BOTTOM VIEW, WITH COVER REMOVED

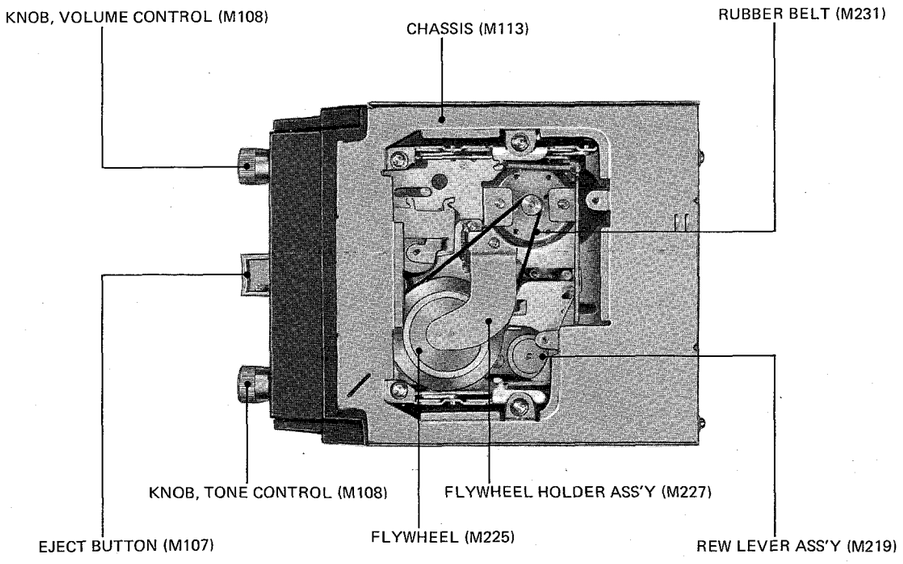

IC EQUIVALENT CIRCUIT

- YEAMM5152L (IC200), PRE AMP

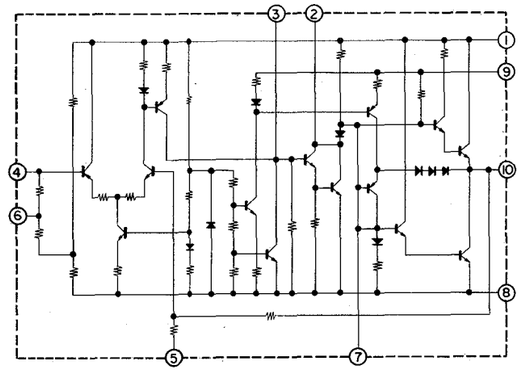

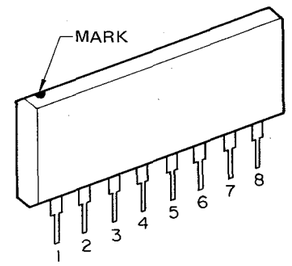

- YEAMUPC1155H (IC201, 301), POWER AMP

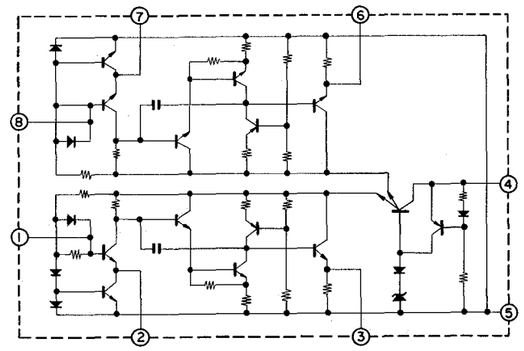

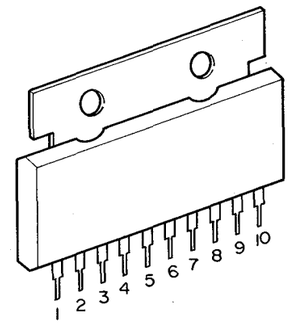

INSTALLATION INSTRUCTIONS

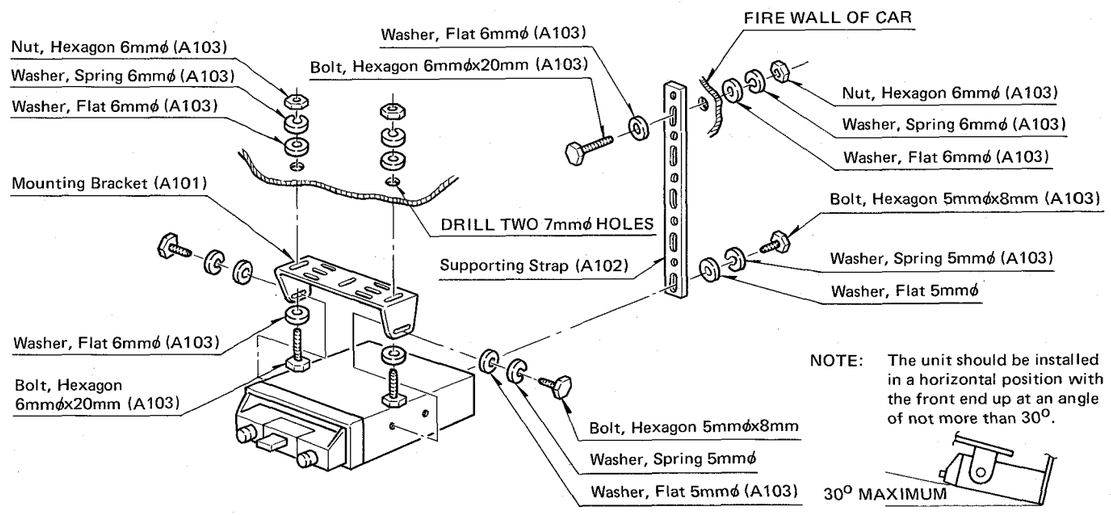

NOTE: The unit should be installed in a horizontal position with the front end up at an angle of not more than 30°.

SCHEMATIC DIAGRAM MODEL CX-5000EN

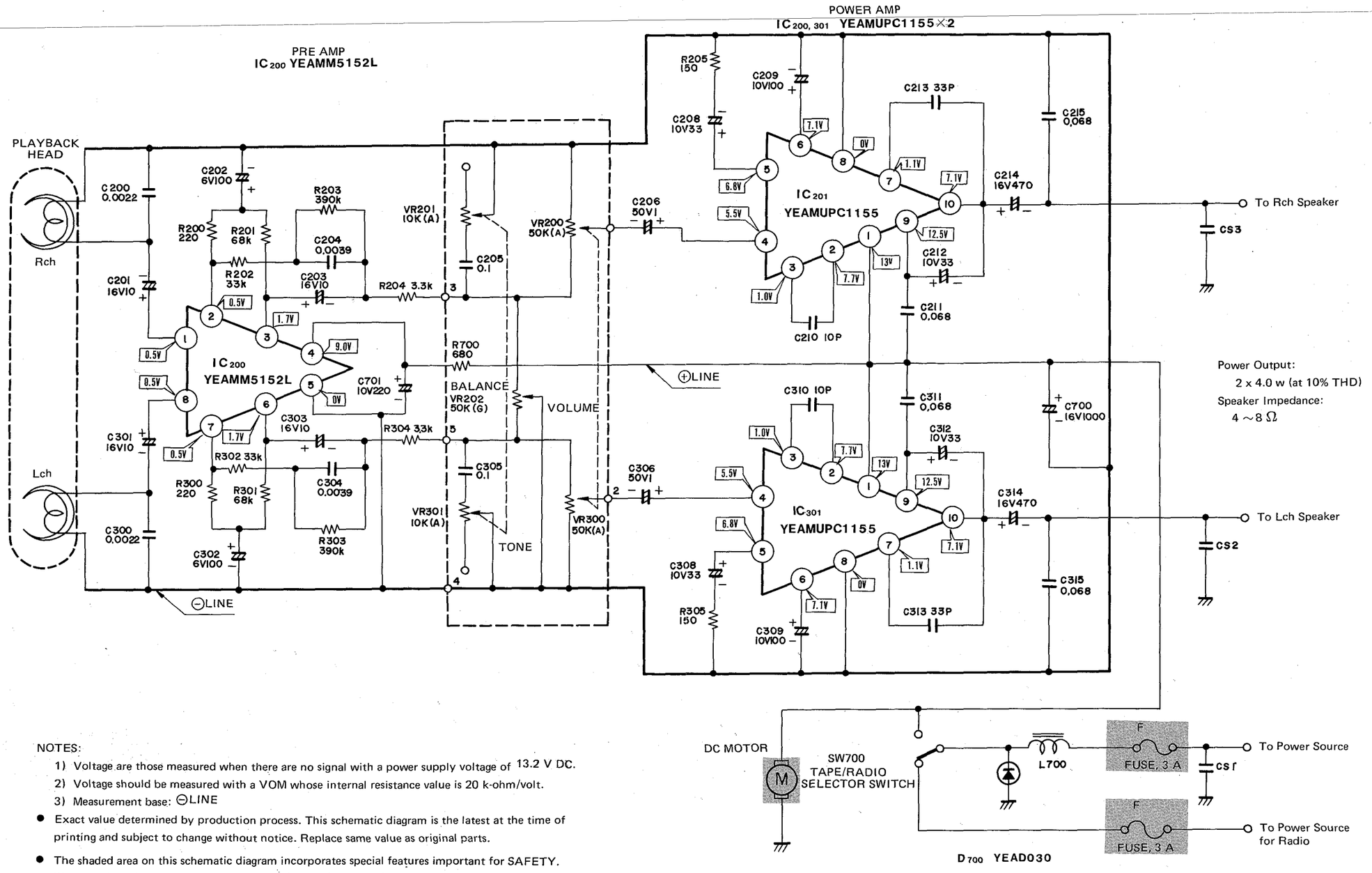

Power Output:
2 x 4.0 w (at 10% THD)
Speaker Impedance:
4 ~ 8 Ω

NOTES:

1) Voltage are those measured when there are no signal with a power supply voltage of 13.2 V DC.
2) Voltage should be measured with a VOM whose internal resistance value is 20 k-ohm/volt.
3) Measurement base: ⊖LINE

- Exact value determined by production process. This schematic diagram is the latest at the time of printing and subject to change without notice. Replace same value as original parts.
- The shaded area on this schematic diagram incorporates special features important for SAFETY. When servicing it is essential that only manufacturer's specified parts be used for the critical components in the shaded areas of the schematic.

R	200 202 201 203 204 700 205 300 302 301 303 304 305
C	200 201 202 203 204 701 205 206 208 209 210 211 212 213 214 215 700 300 301 302 303 304 305 306 308 309 310 311 312 313 314 315

CASSETTE CAR STEREO

WIRING DIAGRAM MODEL CX-5000EN

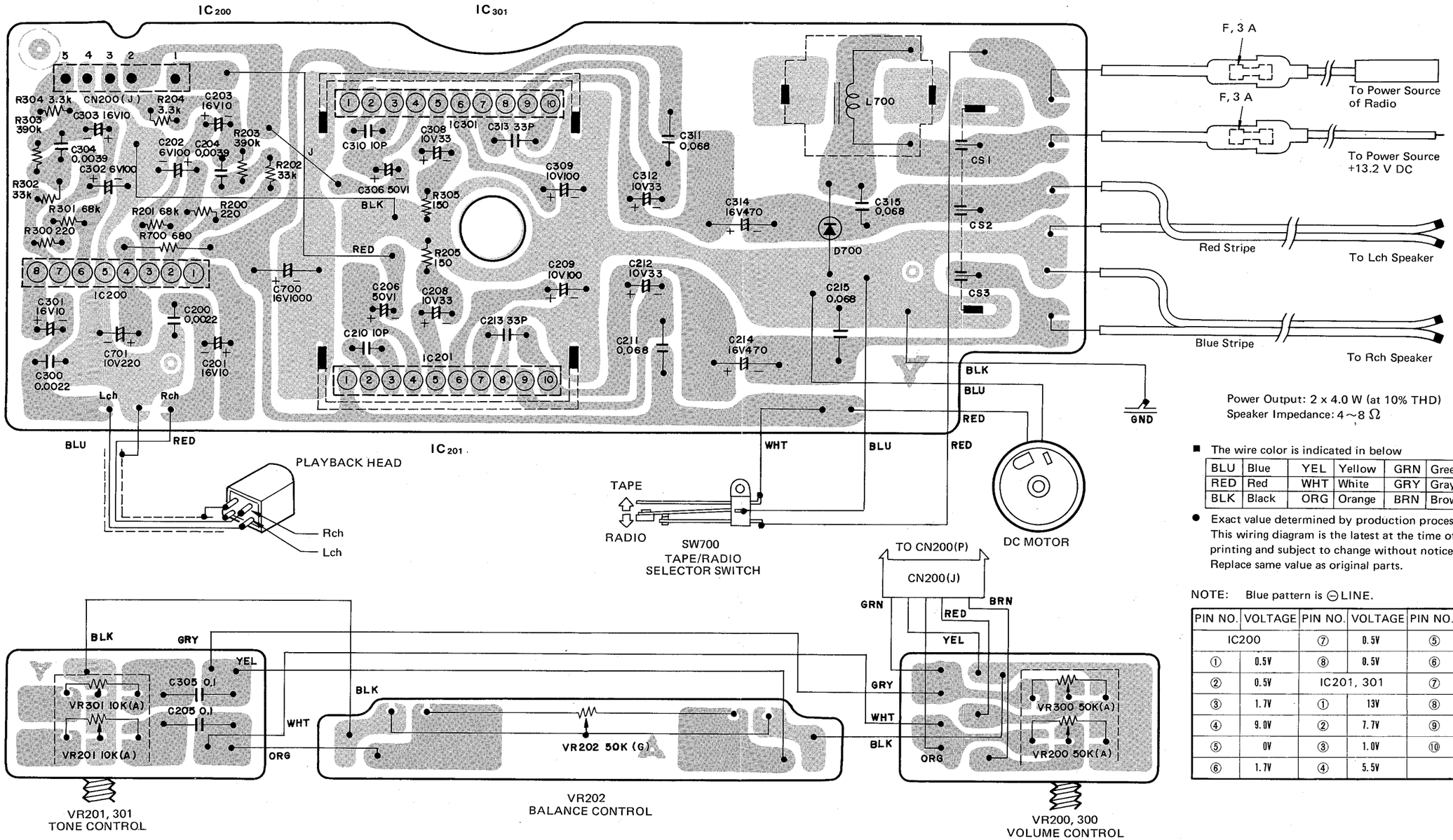

Power Output: 2 x 4.0 W (at 10% THD)
Speaker Impedance: 4～8 Ω

■ The wire color is indicated in below

BLU	Blue	YEL	Yellow	GRN	Green
RED	Red	WHT	White	GRY	Gray
BLK	Black	ORG	Orange	BRN	Brown

● Exact value determined by production process. This wiring diagram is the latest at the time of printing and subject to change without notice. Replace same value as original parts.

NOTE: Blue pattern is ⊖LINE.

PIN NO.	VOLTAGE	PIN NO.	VOLTAGE	PIN NO.	VOLTAGE.
IC200		⑦	0.5V	⑤	6.8V
①	0.5V	⑧	0.5V	⑥	7.1V
②	0.5V	IC201, 301		⑦	1.1V
③	1.7V	①	13V	⑧	0V
④	9.0V	②	7.7V	⑨	12.5V
⑤	0V	③	1.0V	⑩	7.1V
⑥	1.7V	④	5.5V		

Mar., 1977

CASSETTE CAR STEREO

AUTOMATIC EJECT SYSTEM

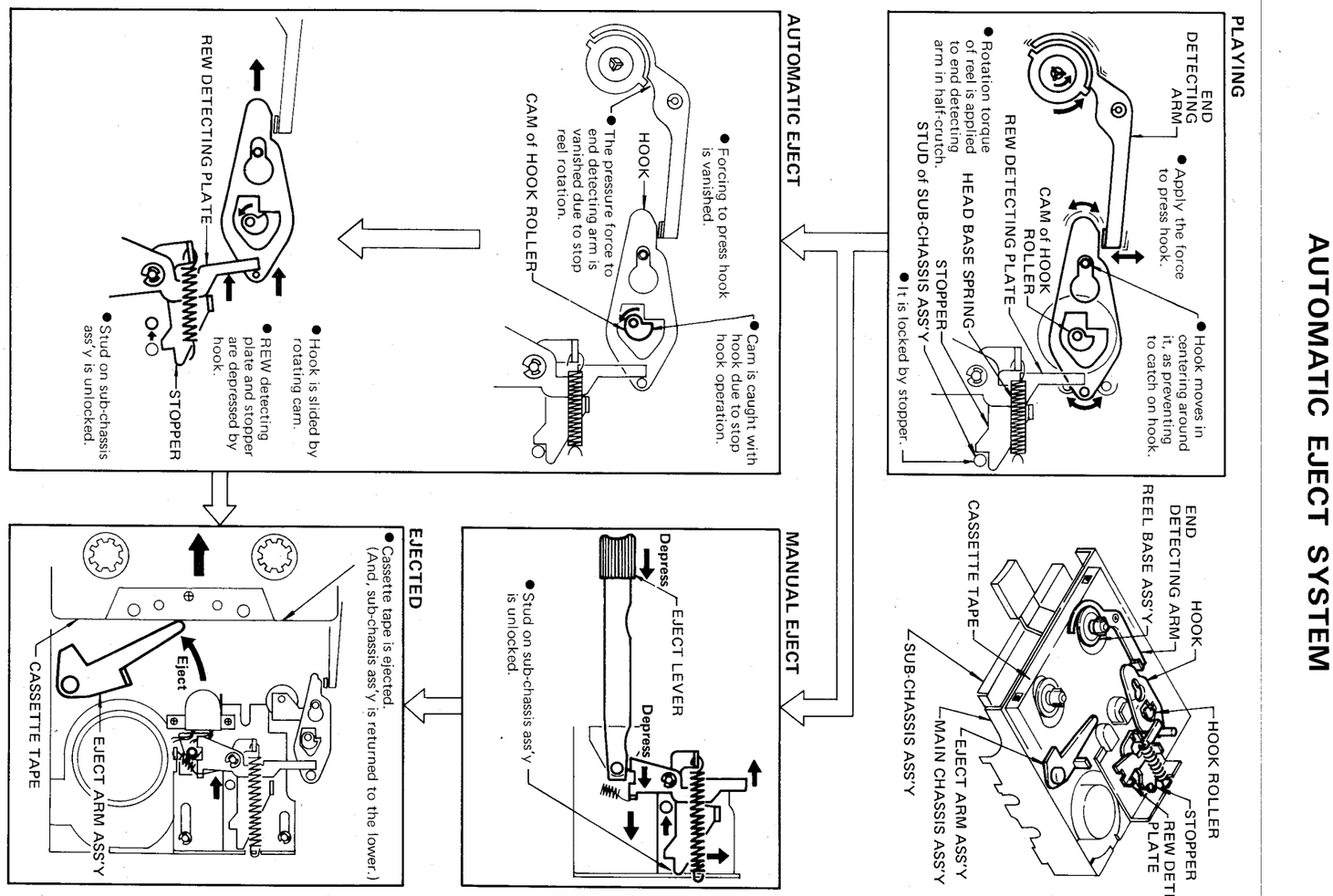

Replacement Parts List
Model NO. CX-5000EN

NOTES:

1. Be sure to make your orders of replacement parts according to this list.
2. Components identified by shaded area have special characteristics important for safety. When replacing any of these components, use only manufacturer's specified parts.
3. The column of Ref. No. indicates the located position of the parts on the EXPLODED VIEW, and see the cross section of the horizontal column (1 ~ up) and the vertical column (A ~ up).

MODEL CX-5000EN

Ref. No.	Part No.	Part Name & Description	Pcs Set	Remarks
MISCELLANEOUS				
F (3,4-E)	XBB1C30NR1	Fuse, 3A	2	
M101 (4-E)	YEAJ01186	Power Supply Cord (Blue)	1	
M102 (3-E)	YEAJ01187	Power Supply Cord (Red)	1	
M103 (4-E)	YEAJ03189	Speaker Cord (R) (Blue Stripe)	1	
M104 (4-E)	YEAJ03190	Speaker Cord (L) (Red Stripe)	1	
M105 (4-E)	YEAJ01089	Power Supply Cord (Blue)	1	
M106 (3-E)	YEAJ01142	Power Supply Cord (Red)	1	
M107 (1-A)	YEFE13049	Eject Button	1	
M108 (1-A)	YEFE07068	Knob, Tone Control, & Volume Control	2	
M109 (1-A)	YEFE04014	Knob, Balance Control	1	
M110 (2-A)	YEFC02387	Escutcheon Ass'y	1	
M110-1 (2-B)	YEFX002077	Cassette Door	1	
M110-2 (2-A)	YEFW06120	Shaft for Cassette Door	1	
M110-3 (2-B)	YAFX011301	Spring for Cassette Door	1	
M110-4 (1-C)	YEFS04052	Cushion Rubber	1	
M110-5 (2-B)	YEFS01106	Pad	1	
M111 (3-D)	YEFM01335	Main Seal	1	
M112 (4-D)	YEFA13076	Case	1	
M113 (2-E)	YEFA01222	Chassis	1	
M114 (5-E)	YEFA03247	Upper Cover	1	
M115 (1-C)	YEFA05124	Bottom Cover	1	
M116 (2-E)	YAFX016027	Cord Clamper	1	
M117 (4-B)	YEFF01150	Heat Sink	1	
M118 (4-C)	YEFX021486	Mounting Bracket	2	
M119	XYN3+C6FXS	⊕ Screw w/Washer, 3mmø x 6mm	4	
M120	XWE3FX	Washer, Flat 3mmø	4	
M121	YEJN01031FX	Nut, Hexagon	2	
M122	XYN2+C4FXS	⊕Screw w/Washer, 2mmø x 4mm	3	
M123	XYN3+F6FXS	⊕Screw w/Washer, 3mmø x 6mm	8	
M124	XSN2+3FXS	⊕Screw w/Washer, 2mmø x 3mm	2	
M125	XYN3+F6FZS	⊕Screw w/Washer, 3mmø x 6mm	6	
M126	XYN2+C5FXS	⊕Screw w/Washer, 2mmø x 5mm	1	
M127	XWA2BFX	Washer, Spring 2mmø	2	
M128 (4-C)	EMCS0501	Connector Plug	1	
M129 (4-D)	EMCB0525A01	Connector Jack	1	
M130 (2-A)	YEFX999099	Space Cover (L)	1	
M131 (1-C)	YEFX999100	Space Cover (R)	1	
M132	XTB3 + 6FFXS	⊕Screw, Taptite, 3mmø x 6mm	1	

EXPLODED VIEW (UNIT)

■ Numbers in ○ are indicated REF. NO. in the REPLACEMENT PARTS LIST.

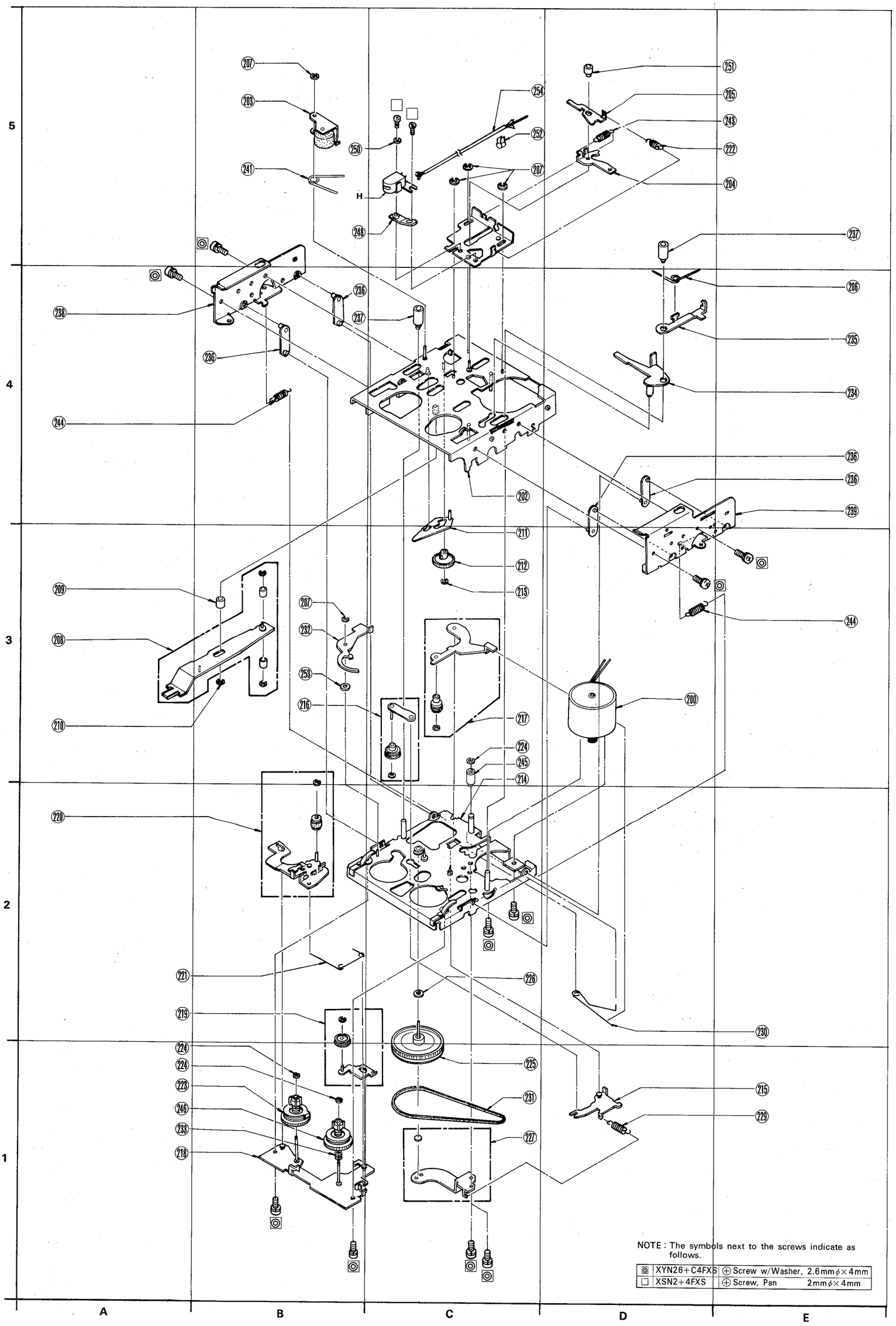

EXPLODED VIEW (TAPE DECK)

■ Numbers in ◯ are indicated REF. NO. in the REPLACEMENT PARTS LIST.

NOTE : The symbols next to the screws indicate as follows.

★	XYN3 + C6FXS	⊕ Screw w/Washer, 3mmφ × 6mm
▣	XYN2 + C4FXS	⊕ Screw w/Washer, 2mmφ × 4mm
※	XYN3 + F6FXS	⊕ Screw w/Washer, 3mmφ × 6mm
✥	XSN2 + 3FXS	⊕ Screw, Pan 2mmφ × 3mm
△	XYN3 + F6FZS	⊕ Screw w/Washer, 3mmφ × 6mm
□	XYN2 + C5FXS	⊕ Screw w/Washer, 2mmφ × 5mm
▩	XTB3 + 6FFXS	⊕ Screw, Taptite 3mmφ × 6mm

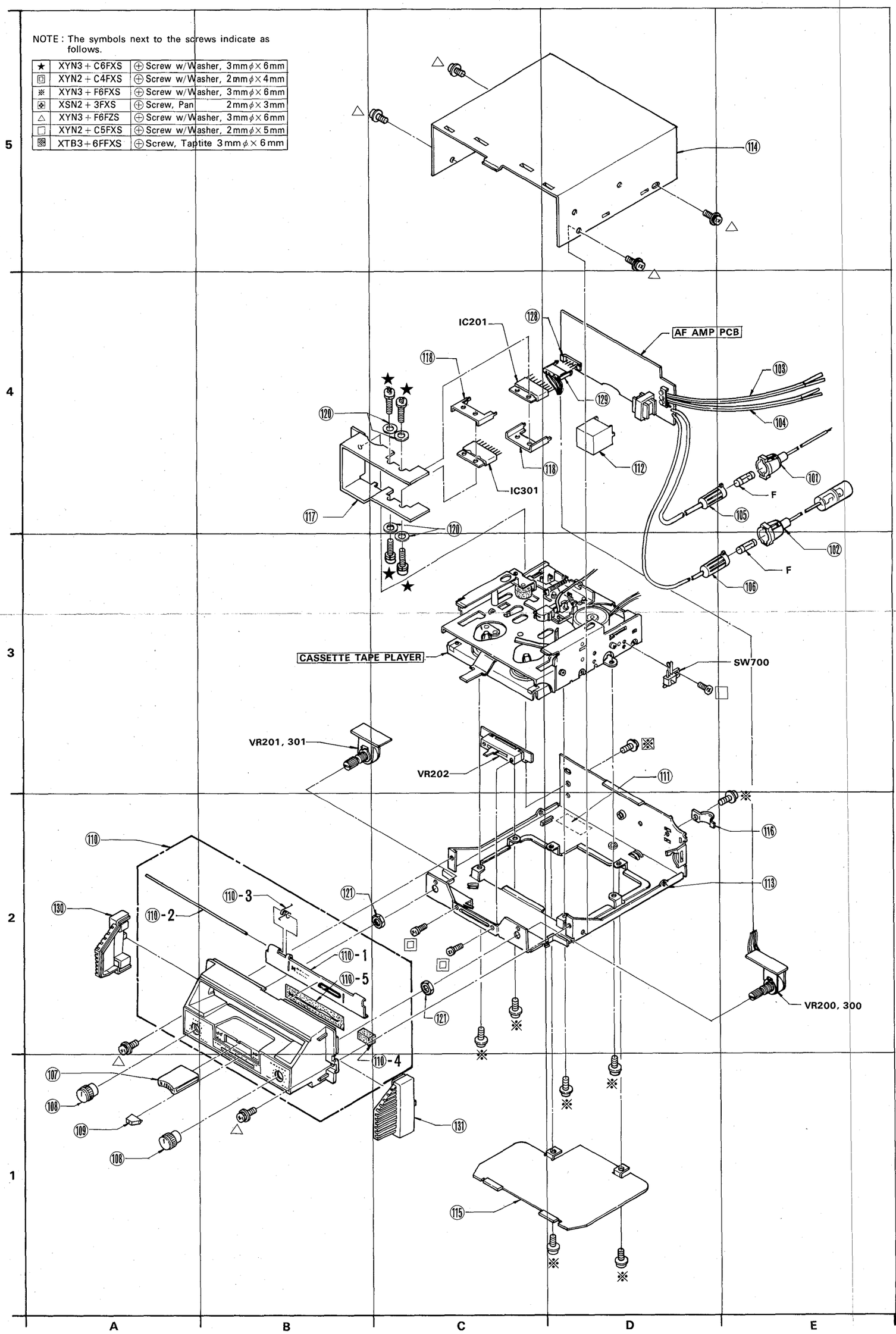

Ref. No.	Part No.	Part Name & Description	Pcs Set	Remarks
TAPE DECK				
HEAD				
H (5-B)	YEAH1542HA	Playback Head	1	
MECHANICAL PARTS				
M200 (3-D)	YASAK01032	Motor Ass'y (w/Pulley)	1	
M202 (4-C)	Not supplied	Main Chassis Ass'y	1	
M203 (5-B)	YEFX218139	Pinch Roller Ass'y	1	
M204 (5-E)	YEFX030017	Stopper	1	
M205 (5-E)	YEFX249143	REW Detecting Plate	1	
M206 (4-E)	YEFX005273A	Pinch Roller Spring	1	
M207 (3-B) (5-B,C)	YEJE01004	E-ring	5	
M208 (3-A)	YASFX049010	Eject Lever Ass'y	1	
M209 (3-A)	YEFW06260	Eject Roller	1	
M210 (3-A)	YEJE01003	E-ring	1	
M211 (3-C)	YEFX234106	Hook	1	
M212 (3-C)	YEFX218136	Hook Roller	1	
M213 (3-C)	YEFX014008	Stop Ring 2.5mmø	1	
M214 (3-C)	Not supplied	Sub-Chassis Ass'y	1	
M215 (1-E)	YEFX046173	Idler Switch Lever Ass'y	1	
M216 (3-B)	YASFX029040	Idler Lever Ass'y	1	
M217 (3-C)	YASFX049011	Tape End Detecting Roller Ass'y	1	
M218 (1-A)	YEFX021471A	Reel Mounting Plate Ass'y	1	
M219 (2-A)	YASFX049012	REW Lever Ass'y	1	
M220 (2-A)	YASFX049013	FR Switch Lever Ass'y	1	
M221 (2-A)	YEFX005270	Spring	1	
M222 (5-E)	YEFX005267	Spring	1	
M223 (1-A)	YEFX209117	Reel Base Ass'y	1	
M224 (1-A) (3-C)	YEFX014007	Snap Ring	3	
M225 (1-C)	YEFX213120	Flywheel	1	

Ref. No.	Part No.	Part Name & Description	Pcs Set	Remarks
M226 (2-C)	YAJW05011	Polyslider	1	
M227 (1-C)	YASFX049014	Flywheel Holder Ass'y	1	
M228	XYN26+C4FXS	⊕Screw w/Washer, 2.6mmø x 4mm	6	
M229 (1-E)	YEFX005271	Idler Selector Spring	1	
M230 (2-E)	YEFX005272	End Detecting Roller Spring	1	
M231 (1-C)	YEFR03022	Rubber Belt	1	
M232 (3-B)	YEFX249141A	End Detecting Arm	1	
M233 (1-A)	YEFX005282A	Back Tension Spring	1	
M234 (4-E)	YEFX249144A	Eject Arm Ass'y	1	
M235 (4-E)	YEFX046165	Lever	1	
M236 (4-B,E)	YEFX249146	Arm	4	
M237 (5-E) (4-B)	YEFW05043	Guide Collar	2	
M238 (4-A)	YEFX239142A	Guide (L)	1	
M239 (4-E)	YEFX239141	Guide (R)	1	
M240	XYN26+C4FXS	⊕Screw w/Washer, 2.6mmø x 4mm	4	
M241 (5-B)	YEFX005273A	Pinch Roller Spring	1	
M243 (5-B)	YEFX005275	Head Base Spring	1	
M244 (3-E)	YEFX005266	Eject Spring	2	
M245 (3-C)	YEFW05044	Shaft Collar	1	
M246 (1-A)	YEFX209118	Reel Base Ass'y (B)	1	
M248 (5-B)	YEFX005263A	Head Azimuth Adjustment Spring	1	
M249	XSN2+4FXS	⊕Screw,Pan 2mmø x 4mm	2	
M250 (5-B)	XWA2BFX	Washer, Spring 2mmø	1	
M251 (5-E)	YEFR01041	Bushing	1	
M252 (5-C)	YEFX007115	Cord Clamp	1	
M253 (3-B)	YEJW05006	Polyslider	1	
M254 (5-C)	YEAJ18087	Head Shield Wire	1	

Ref. No.	Part No.	Part Name & Description	Pcs Set	Remarks
		ICs		
IC200	YEAMM5152L	PRE Amp	1	
IC201, 301	YEAMUPC1155	AF Power Amp	2	
		DIODE		
D700	YEAD030	Spark Suppression	1	
		CAPACITORS		
C200	YECQN1H222M	0.0022 MFD 50WV ±20% Polyester	1	
C201	ECEA16V10L	10 MFD 16WV Electrolytic	1	
C202	ECEA6V100L	100 MFD 6WV Electrolytic	1	
C203	ECEA16V10L	10 MFD 16WV Electrolytic	1	
C204	YECQN1H392K	0.0039 MFD 50WV ±10% Polyester	1	
C205	YECCD12104M	0.1 MFD 12WV ±20% Ceramic	1	
C206	ECEA50V1L	1 MFD 50WV Electrolytic	1	
C208	ECEA10V33L	33 MFD 10WV Electrolytic	1	
C209	ECEA10V100L	100 MFD 10WV Electrolytic	1	
C210	YECCD1H100FM	10 PF 50WV ±1% Ceramic	1	
C211	YECQN1H683M	0.068 MFD 50WV ±20% Polyester	1	
C212	ECEA10V33L	33 MFD 10WV Electrolytic	1	
C213	YECCD1H330KM	33 PF 50WV ±10% Ceramic	1	
C214	ECEA16V470W	470 MFD 16WV Electrolytic	1	
C215	YECQN1H683M	0.068 MFD 50WV ±20% Polyester	1	
C300	YECQN1H222M	0.0022 MFD 50WV ±20% Polyester	1	
C301	ECEA16V10L	10 MFD 16WV Electrolytic	1	
C302	ECEA6V100L	100 MFD 6WV Electrolytic	1	
C303	ECEA16V10L	10 MFD 16WV Electrolytic	1	

Ref. No.	Part No.	Part Name & Description	Pcs Set	Remarks
C304	YECQN1H392K	0.0039 MFD 50WV ±10% Polyester	1	
C305	YECCD12104M	0.1 MFD 12WV ±20% Ceramic	1	
C306	ECEA50V1L	1 MFD 50WV Electrolytic	1	
C308	ECEA10V33L	33 MFD 10WV Electrolytic	1	
C309	ECEA10V100L	100 MFD 10WV Electrolytic	1	
C310	YECCD1H100FM	10 PF 50WV ±1% Ceramic	1	
C311	YECQN1H683M	0.068 MFD 50WV ±20% Polyester	1	
C312	ECEA10V33L	33 MFD 10WV Electrolytic	1	
C313	YECCD1H330KM	33 PF 50WV ±10% Ceramic	1	
C314	ECEA16V470W	470 MFD 16WV Electrolytic	1	
C315	YECQN1H683M	0.068 MFD 50WV ±20% Polyester	1	
C700	ECEA16V1000L	1000 MFD 16WV Electrolytic	1	
C701	ECEA10V220L	220 MFD 10WV Electrolytic	1	
CS1~3	YECCL510289	1000 PF x 3 Feedthrough	1	
		RESISTOPS		
R200	ERD18VJ221	220 OHM 1/8W ±5% Carbon	1	
R201	ERD18VJ683	68k OHM 1/8W ±5% Carbon	1	
R202	ERD18VJ333	33k OHM 1/8W ±5% Carbon	1	
R203	ERD18VJ394	390k OHM 1/8W ±5% Carbon	1	
R204	ERD18VJ332	3.3k OHM 1/8W ±5% Carbon	1	
R205	ERD18VJ151	150 OHM 1/8W ±5% Carbon	1	
R300	ERD18VJ221	220 OHM 1/8W ±5% Carbon	1	
R301	ERD18VJ683	68k OHM 1/8W ±5% Carbon	1	
R302	ERD18VJ333	33k OHM 1/8W ±5% Carbon	1	
R303	ERD18VJ394	390k OHM 1/8W ±5% Carbon	1	
R304	ERD18VJ332	3.3k OHM 1/8W ±5% Carbon	1	
R305	ERD18VJ151	150 OHM 1/8W ±5% Carbon	1	
R700	ERD18TJ681	680 OHM 1/8W ±5% Carbon	1	

Ref. No.	Part No.	Part Name & Description	Pcs Set	Remarks
VARIABLE RESISTORS				
VR200, 300	EVJR1AK15A54	50k OHM (A) x 2 Volume Control	1	
VR201, 301	EVJR0AK15A14	10k OHM (A) x 2 Tone Control	1	
VR202	EVAK0AC10G54	50k OHM (G) Balance Control	1	
COIL				
L700	YETQ020F012	Choke Coil	1	
SWITCH				
SW700	YEAS23111	Power Switch	1	

Ref. No.	Part No.	Part Name & Description	Pcs Set	Remarks
ACCESSORIES				
A101	YEFG02039	Mounting Bracket	1	
A102	YAFG04008	Supporting Strap	1	
A103	YEP9BS360	Mounting Screw Kit	1	
	(XVG5C8FZS)	(Bolt, Hexagon 5mmø x 8mm)	(3)	
	(XVG6C20FZS)	(Bolt, Hexagon 6mmø x 20mm)	(3)	
	(XNG6GFZS)	(Nut, Hexagon 6mmø)	(3)	
	(XWA5BFZ)	(Washer, Spring 5mmø)	(3)	
	(XWG5FZ)	(Washer, Flat 5mmø)	(2)	
	(XWA6BFZ)	(Washer, Spring 6mmø)	(3)	
	(YEJW02019FX)	(Washer, Flat)	(1)	
	(XWG6FZ)	(Washer, Flat 6mmø)	(6)	
PRINTING				
A104	YEFM06526	Instruction Book	1	

TROUBLE SHOOTING GUIDE

SYMPTOM	CAUSE	REMEDY
No output when cassette tape is inserted.	Fuse, blown.	Replace a rated fuse (3 A).
	Play On/Off Switch, faulty.	Repair or replace.
	Connector, disconnected.	Repair or replace.
High distortion or dead one channel.	Head face, dirty.	Clean it.
	Power IC, faulty.	Check and replace.
	Amplifier, faulty.	Check and repair.
	Volume, balance, tone, faulty.	Check and replace.
Low volume.	Head face, dirty.	Clean it.
	Power IC, faulty.	Check and replace.
	Amplifier, faulty.	Check and repair.
	Volume control, faulty.	Check and replace.
Low speed.	Motor, faulty.	Replace it.
	Cassette tape, faulty.	Replace a new tape.
	Drive belt, faulty.	Replace it.
	Tape drive mechanism, faulty.	Check and repair.
Wow & flutter.	Drive belt, faulty.	Replace it.
	Flywheel, greasy.	Clean it.
	Motor pulley, greasy.	Clean it.
	Motor, faulty.	Replace it.
	Pinch roller, faulty.	Replace it.
	Cassette tape, faulty.	Replace a new tape.
Automatic eject does not operate.	Hook, faulty.	Replace it.
	Reel mounting plate ass'y, faulty.	Replace it.
	Eject mechanism and relative parts, faulty.	Check and replace. (Refer to the Automatic Eject System in page 6.)
FF or REW does not operate.	REW lever ass'y, faulty.	Replace it.
	FR switch lever ass'y, faulty.	Replace it.
	Flywheel, greasy.	Clean it.

PRINTED IN JAPAN
1977. 3. 3200 N